CASCADIA

FIBERGLASS INNOVATION

ENERGY EFFICIENT
LOW COST
FAST INSTALLATION

CASCADIA CLIP®

FIBERGLASS THERMAL SPACER

CONTENTS

WHY FIBERGLASS?

The Cascadia Clip® cladding support system for exterior insulated walls improves energy efficiency and lowers construction cost. It separates steel girts from the back-up wall and allows the insulation value to be fully realized. This eliminates degradation of insulation value that occurs with traditional steel girts and clips.

"The Cascadia Clip® wall is about cost-neutral to a single continuous Z-girt wall, but with twice the performance."

Ron Blankert, President, BJ Plastering

"This is what I really think is the definition of good green design. It is unobtrusive, it solves a serious problem, it is easy to use and does its job really well."

Lloyd Alter, Managing Editor, Toronto

EIGHT SIZES AVAILABLE


THIS SIDE
SOPREMA
SOPRASEAL

THERMAL MODELING & FIELD COMPARISON

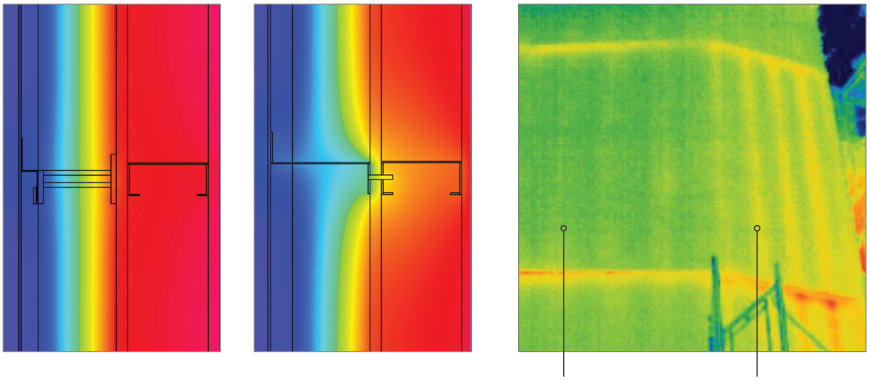

Cascadia Clip® system | Typical Z-girt system | With Cascadia Clip® system | With typical Vertical Z-girt system

R-16.8 FT²·°F·HR/BTU*

Cascadia Clips® limit heat flow through wall.

*With 4" of mineral wool

*Whole-wall effective insulation value

*At 16" O.C horizontally + 36" vertically

A THERMAL WASHER

Because Cascadia Clips® are used to separate traditional Z-girts or hat tracks from the backup wall structure, they are universal to any type of cladding.

They will support any cladding that would normally be attached with these methods, or any other type of rail system.

COST COMPARISON

CASCADIA CLIP® SYSTEM

R-16.8 EFFECTIVE Easily increased to R-28+

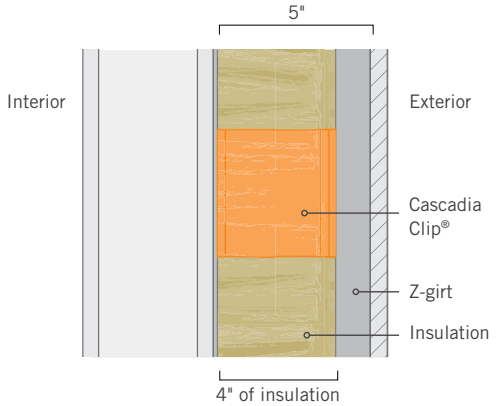

Cost of clips and girts **~$0.13 per ft² / per R-value**

Additional indirect costs

+ One layer of insulation

VERTICAL + HORIZONTAL DOUBLE GIRT SYSTEM

R-15 EFFECTIVE Not easily increased

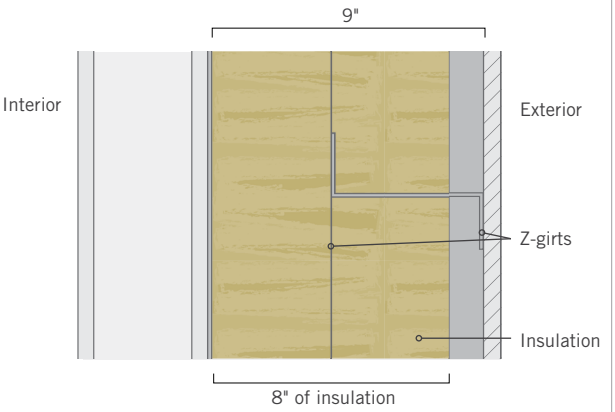

Cost of girts **~$0.16 per ft² / per R-value**

Additional indirect costs

+ Twice the insulation
+ Twice the labour
+ Twice the flashing
+ More lost floor space that the owner cannot use or sell

CONSTRUCT COST-EFFECTIVE HIGH R-VALUE WALLS

Since the effective R-value is extremely efficient compared to any other cladding support assembly, a much thinner wall will accomplish the same or better results.

The cost savings available from using Cascadia Clips® can be as much as $5 per square foot compared to other, more conventional cladding support systems that attempt to meet similar performance targets.

WHEN SPACING OF THE CLIPS IS OPTIMIZED, THE CASCADIA CLIP IS THE CHEAPEST $/R-VALUE OF ANY OTHER CLIP SYSTEM ON THE MARKET.

VERTICAL GIRT APPLICATION

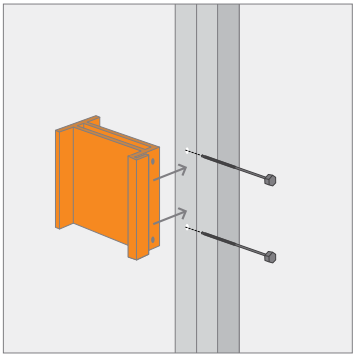

STEP 1

Attach clips to steel girt

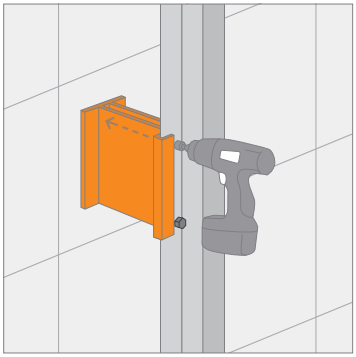

STEP 2

Fasten girts and clips to the wall with screws; long screws connect girts directly to the structure, passing through the clips

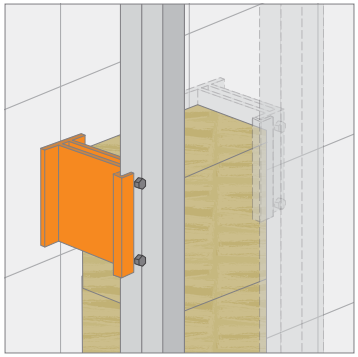

STEP 3

Install insulation and fasten next girt

HORIZONTAL TRACK APPLICATION

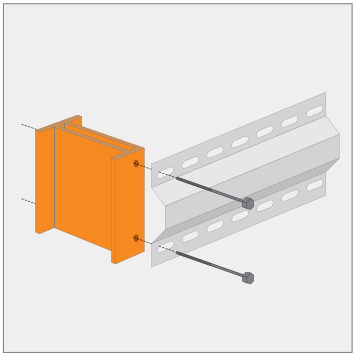

The Cascadia Clip® can be used with a horizontal hat-track; slotted tracks allow flexibility for aligning clips to studs

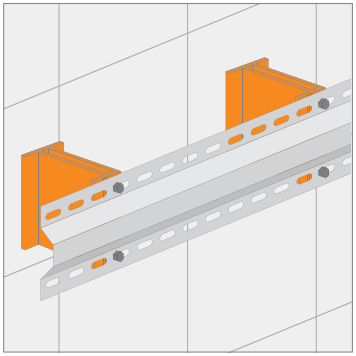

A simple and effective way to support vertically oriented cladding; fasteners will hold assembly together for installation convenience

ADJUSTABILITY

The Cascadia Clip now has accessories to handle uneven wall substrates. Please visit cascadiaclip.com or contact us for more info on the adjustable Cascadia Clip.

COMBUSTIBILITY

THE CASCADIA CLIP® IS **FULLY CODE-COMPLIANT** FOR FIRE PERFORMANCE IN BOTH CANADA AND THE USA FOR **EVERY** TYPE OF WALL ASSEMBLY.

1. The Clips are intermittent, both vertically and horizontally, and almost completely covered by non-combustible mineral wool. Because of this, they do not alter the wall's fire protection in any way – for better or for worse.
2. Fire does not damage the Clips' ability to hold the cladding in place, because cladding is attached to steel Z-girts which are attached directly to the backup wall with screws passing completely through the clip.

The fiberglass clips are not a structural connection for the cladding: the structural connection of cladding to backup wall is done via steel girts and screws.

CANADA

While fiberglass is combustible, the clip functions within non-combustible wall assemblies as a minor combustible component, in accordance with Article 3.1.5.2 of the Model National Building Code.

The clip is enclosed within the non-combustible insulation and the fasteners attach the cladding directly to the structure. Fire protection and building code professionals support the clip as a minor combustible component, in compliance with the building code.

The Building and Safety Standards Branch of the BC Ministry of Energy and Mines confirmed that the Cascadia Clip® is a minor combustible component, acceptable for use in non-combustible construction.

USA

The Cascadia Clip® has been approved through IAPMO for a Uniform Evaluation Service report, evaluating the Clip for use in projects across the USA, in all types of construction, including non-combustible wall assemblies. The IAPMO UES report evaluates the Clip for the 2012 and 2015 international Building Code, ensuring that the clips have met the most rigorous standards and are in full compliance. Using comprehensive fire-testing data, including a successful NFPA 285 report with combustible cladding, the evaluation approves the clip for use in non-combustible wall assemblies.

It also includes analysis and approval of durability, structural capacity, and more. Cascadia Clips® are the *only* thermally improved cladding support system with a code evaluation. Please contact us or visit our website for more information or a copy of this report!

THERMAL PERFORMANCE

	STEEL FRAMED		CONCRETE	WOOD FRAMED	
	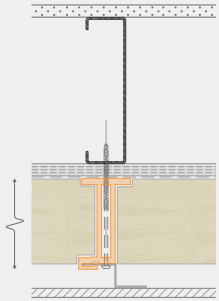		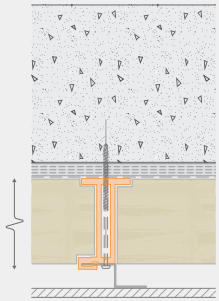	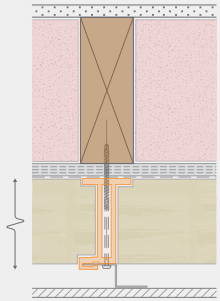	
	3⅝" (NO BATTS)	3⅝" (BATTS IN CAVITY)	6" CONCRETE	2X4 (BATTS IN CAVITY)	2X6 (BATTS IN CAVITY)
Clip / insulation depth (in.)	Effective R-values (FT² ·°F·HR/BTU)				
2	10.9	16.7	9.7	20.6	26.4
2.5	12.1	18.4	11.5	22.7	28.4
3	13.7	20	13.1	24.2	30
3.5	15.3	21.7	14.8	26.2	32
4	16.8	23.4	16.5	27.8	33.7
5	19.8	26.6	19.8	31.2	37.1
6	22.7	29.7	23	34.6	40.4
8	28.5	36	29.5	41.2	47.1

- All results using exterior mineral fibre insulation (R4.2/inch).
- Steel studs are 18ga material.
- Steel and wood studs assuming clip spacing of 16" horizontally and 48" vertically.
- Concrete assuming clip spacing of 24" horizontally and 36" vertically.
- More effective R-value results based on different spacings and combinations of wall assemblies can be found on our website using our Cascadia Clip® Calculator.
- If allowed by the cladding, Cascadia Clips can be spaced out even further in many cases.

CALCULATOR

CASCADIA CLIP® CALCULATOR: CALCULATOR.CASCADIACLIP.COM

INPUTS

Backup Wall	2x4 Steel studs	Options of 16, 18, 20 gauge
	2x4 Wood studs	
	2x6 Wood studs	
	6" Concrete	
Batts in Cavity	Yes	Yes for wood, no for concrete, split insulation allowed for steel studs
	No	
Exterior Insulation	R4.2/inch – mineral wool	
	R6.2/inch – spray foam	
Fastener Type	Galvanized Steel	Standard offering
	Stainless Steel	Better thermal performance
Horizontal Spacing	16	Standard studs
	24	Suggested for concrete
	32	With light cladding, can go every other stud
Cladding Dead Load	1-20 psf	Have done projects up to 27psf

The online Cascadia Clip® Calculator helps you calculate the spacing required for your specific project.

You input the variables specific to your project, and use the outputs to find the smallest clip at the largest spacing that meets the project requirements for thermal performance and allowable wind loading. This helps you save money by using the right number of clips - not more, not less.

This tool is **fully engineered**, and when paired with the engineering reports that corroborate the results, can be used as the submittal documents.

There are over 75,000 combinations of walls, with thermal and structural results for each.

OUTPUTS

Efffective Thermal Performance of Wall Assemblies [R-Value$_{eff}$]

VERTICAL CLIP SPACING [IN]	INSULATION DEPTH / CLIP SIZE [IN] 2	2.5	3	3.5	4	5	6	8
26	15.3	16.7	18	19.5	20.8	23.5	26	31.2
36	16.1	17.7	19.2	20.8	22.3	25.2	28.1	33.9
48	16.7	18.4	20	21.7	23.4	26.6	29.7	36

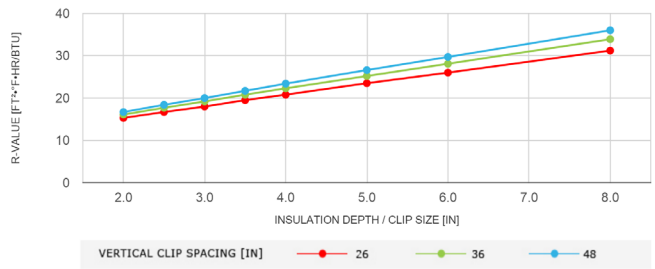

Example Thermal Output from Online Calculator

Tables and graph show the same thing in different formats. Values show the effective R-values of the wall assembly, based on the chosen inputs and combination of clip sizes and vertical spacing.

Structural Capacity - Maximum Allowable Wind Load [psf]*

VERTICAL CLIP SPACING [IN]	INSULATION DEPTH / CLIP SIZE [IN] 2	2.5	3	3.5	4	5	6	8
26	127.2	126.1	124.9	123.7	122.5	120.1	117.8	113
36	89.3	88.1	86.9	85.7	84.6	82.2	79.8	75.1
48	64.6	63.5	62.3	61.1	59.9	57.5	55.2	50.4

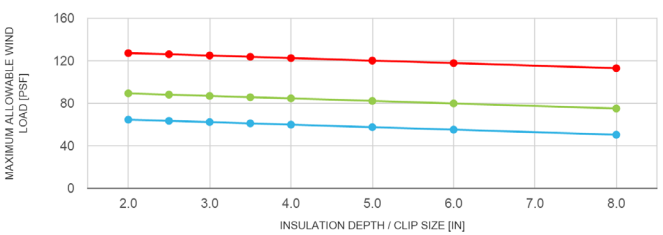

* X INDICATES THAT THE SPECIFIED SUPPORT SYSTEM IS UNABLE TO SUPPORT THE CLADDING.

Example Structural Output from Online Calculator

Tables and graph show the same thing in different formats. Values show the allowed suction wind pressures on the wall assembly, based on the chosen inputs and combination of clip sizes and vertical spacing. Built in safety factor of 3.0.

Choose the smallest clip at the largest spacing that meets both the thermal and structural requirements of the project.

PREMISE OF STRUCTURAL DESIGN

The clips are intermittent and are sandwiched between continuous Z-girts to the outside and the sheathing of the back-up wall to the inside. The fasteners (two per clip) attach the Z-girts to the back-up wall studs, passing through holes in the clips. The clips and fasteners are required to resist vertical loads imposed by cladding weight, and horizontal loads imposed by wind pressures and inertial forces from earthquakes. Wind loads are assumed to govern lateral load scenarios.

Due to the intermittent nature of the clips, the dead load of the exterior cladding causes rotational force in the clip. This creates tension in the upper screw; the pull-out of this screw is the governing factor of the Cascadia Clip® design.

The pull-out force on the upper screw has two contributing factors

- Dead load of the cladding
- Negative wind pressure on the cladding

Assumptions

- All clips share vertical load equally
- Clips act independently to resist overturning

SCREW FASTENER DESIGN PARAMETERS

Sheathing thickness		12.7 mm	0.5 in
Vertical girt depth		25.4 mm	1 in
Cladding thickness		19.05 mm	0.75 in
Cascadia Clip® size	Depth	Varies	Varies
	Length	101.6 mm	4.0 in
	Screw edge distance	12.7 mm	0.5 in
	Screw spacing	76.2 mm	3.0 in

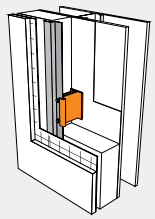

ALLOWABLE FASTENER LOADS (FACTOR OF SAFETY: 3.0)

STEEL STUD SUBSTRATE – RECOMMENDED FASTENER: LELAND INDUSTRIES – ¼ X 14 MASTER DRILLER NO.2 MINI DRILL POINT, DT 2000 COATED				
For 20 gauge studs	T_{ALLOW}	725 N	163 lb	Leland Industries – Manufacturer's Testing
	V_{ALLOW}	703 N	158 lb	Deitrich
For 18 gauge studs	T_{ALLOW}	1023 N	230 lb	Leland Industries – Manufacturer's Testing
	V_{ALLOW}	1041 N	234 lb	Deitrich
WOOD STUD SUBSTRATE – RECOMMENDED FASTENER: LELAND INDUSTRIES – ¼ X 10 MASTER GRIPPER, DT 2000 COATED				
Wood studs + plywood sheathing	T_{ALLOW}	979 N	220 lb	Values from Leland Master Gripper 14 x 10 with 1" effective penetration into Douglas Fir
	V_{ALLOW}	654 N	147 lb	
CONCRETE/CMU SUBSTRATE – RECOMMENDED FASTENER: LELAND INDUSTRIES – #14 X 15 CONCRETE SCREW, DT 2000 COATED				
4000 psi Concrete – 1.5" embedment	T_{ALLOW}	1370 N	308 lb	Intertek Testing of Leland Industries 14-15 concrete screws; predrilled holes at 3⁄16" diameter
Hollow Concrete Masonry Units – 1.0" embedment	T_{ALLOW}	672 N	151 lb	Intertek Testing of Leland Industries 14-15 concrete screws; predrilled holes at 3⁄16" diameter

TECHNICAL DETAILS

The design information provided in this brochure has been prepared based on a review of industry available screw pull-out and shear load test data, with resultant factors of safety in the connection design ranging from 3 to 4. The specific design curves included in the brochure are based on a FS of 3.0 utilizing the fasteners identified in the above chart as 'Recommended Fasteners' for each substrate type. It is important to note that in the design curves for applications in 20 ga and 18 ga steel framing, Leland's ¼" Master Driller screw with no.2 mini drill point is used, and provides greater capacity than common no.3 drill points. The use of mini drill point screws provides for reasonable ease of installation, while maintaining significantly higher pull-out resistances than no.3 drill points in light gauge steel framing.

The design of screw fastened connections is a task normally completed or reviewed by a structural engineer. The online Cascadia Clip® Calculator is a fully engineered design tool, complete with stamped engineering reports, to illustrate acceptable design application of the Cascadia Clips® under numerous building and environmental conditions. This calculator can be used for engineered submittal documents of the wall assembly, as long as the wall configurations are upheld.

The Cascadia Clip® is a suitable substrate for a number of cladding systems, including stucco. Stucco is inherently prone to cracking, and Cascadia assumes no responsibility whatsoever for any cracking of a stucco application.

HOW TO SPECIFY

Cascadia Clips® – Fiberglass Thermal Spacers
2", 3.5", 4", 5", or 6" depth

Steel Z-girts
18 gauge; sizing and coating by engineer/specifier. Most common configuration: 18 gauge with Galvalume AZM 150 coating (or AZ-50 – USA) 1.5" x 1" x 1.25" size.

Screws
Steel studs: ¼x14 x 4" Master Driller no.2 point DT2000 by Leland Industries (or 5", 6", 7", 8")

Wood studs: ¼x10 x 4" Master Gripper DT2000 by Leland Industries (or 5", 6", 7", 8")

Concrete/CMU: #14x15 x 3.5" Concrete Screw DT2000 by Leland Industries (or 5", 5.5", 6.5", 7.5")

All fasteners listed above are available through Cascadia Windows Ltd.

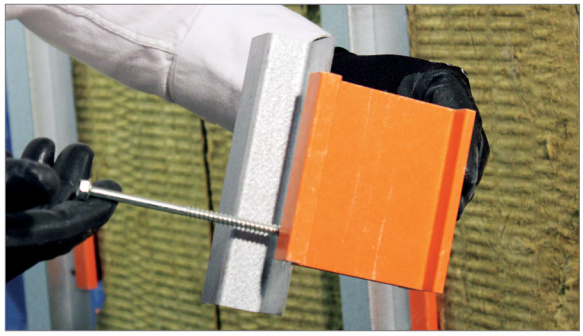

Insulation
CavityRock® DD by Roxul, RainBarrier45® by Thermafibre, or approved alternative [specifier to input total insulation thickness; match the depth of the Cascadia Clip]

Spray Foam Insulation
Various types may be used

DECLARE LABEL

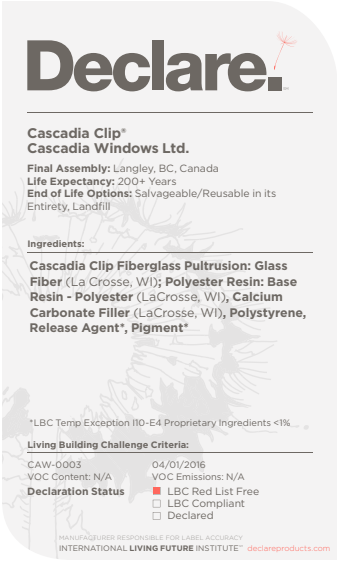
Declare.

Cascadia Clip®
Cascadia Windows Ltd.

Final Assembly: Langley, BC, Canada
Life Expectancy: 200+ Years
End of Life Options: Salvageable/Reusable in its Entirety, Landfill

Ingredients:

Cascadia Clip Fiberglass Pultrusion: Glass Fiber (La Crosse, WI)**; Polyester Resin: Base Resin - Polyester** (LaCrosse, WI)**, Calcium Carbonate Filler** (LaCrosse, WI)**, Polystyrene, Release Agent*, Pigment***

*LBC Temp Exception I10-E4 Proprietary Ingredients <1%

Living Building Challenge Criteria:

CAW-0003
VOC Content: N/A
Declaration Status

04/01/2016
VOC Emissions: N/A
■ LBC Red List Free
□ LBC Compliant
□ Declared

MANUFACTURER RESPONSIBLE FOR LABEL ACCURACY
INTERNATIONAL **LIVING FUTURE** INSTITUTE™ declareproducts.com

VRCA AWARD

Cascadia Clips® received an award from the Vancouver Regional Construction Association (VRCA) in 2011 in the category of ***Sustainability and Innovation***.

VRCA

ACCLAIMED BY

BC EXPORT AWARDS 2012

BC's Leading Innovators BCBUSINESS

NRC NEW TECHNOLOGY AWARD FINALIST

THE WTN TIME CNN WORLD TECHNOLOGY AWARD FINALIST

GLOBE AWARDS INNOVATION AWARD WINNER

LIVING BUILDING CHALLENGE CERTIFIED

Red List Free

DESIGN

OUTSIDE 90º CORNER

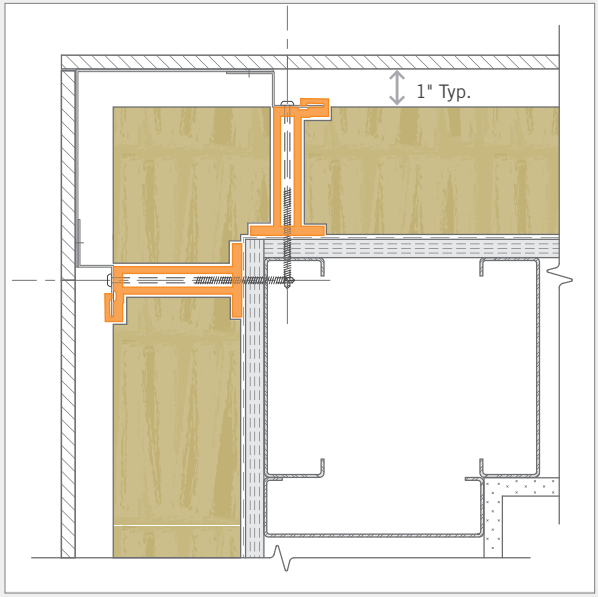

VERTICAL WALL SECTION

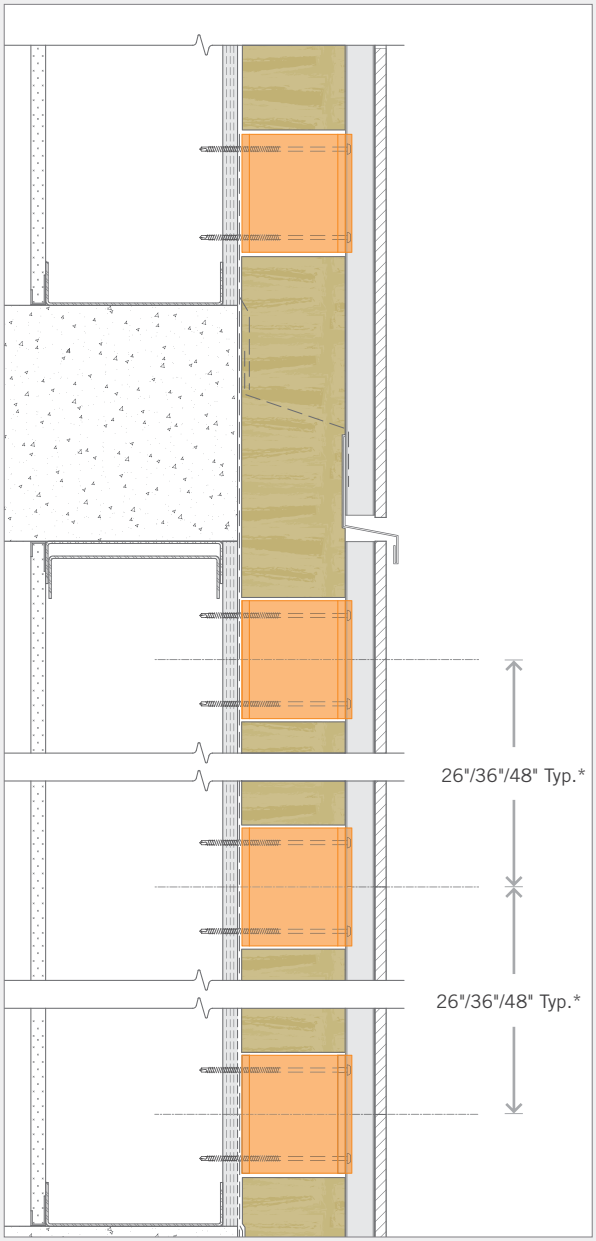

HORIZONTAL WALL SECTION

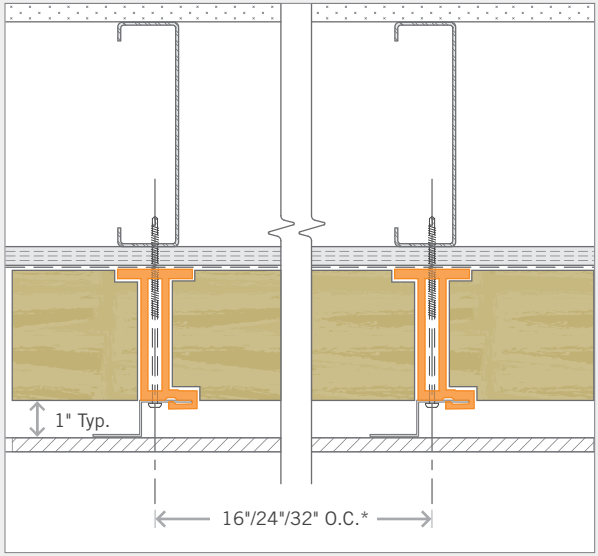

The Cascadia Clip® is a registered industrial design and patented product. Additional patents pending.
For more technical drawings and information, visit **www.cascadiaclip.com**

**Depending on spacing*

FOR FURTHER INFORMATION
ON THE CASCADIA CLIP®

CALL **604 857 4600**
EMAIL **INFO@CASCADIACLIP.COM**

CONTACT A TECHNICAL SALES REP IN
YOUR AREA BY VISITING CASCADIACLIP.COM
SEE THE 'CONTACT US' PAGE.

CASCADIA WINDOWS LTD.
LANGLEY, BRITISH COLUMBIA
604 857 4600

CASCADIACLIP.COM

CASCADIA
WINDOWS & DOORS